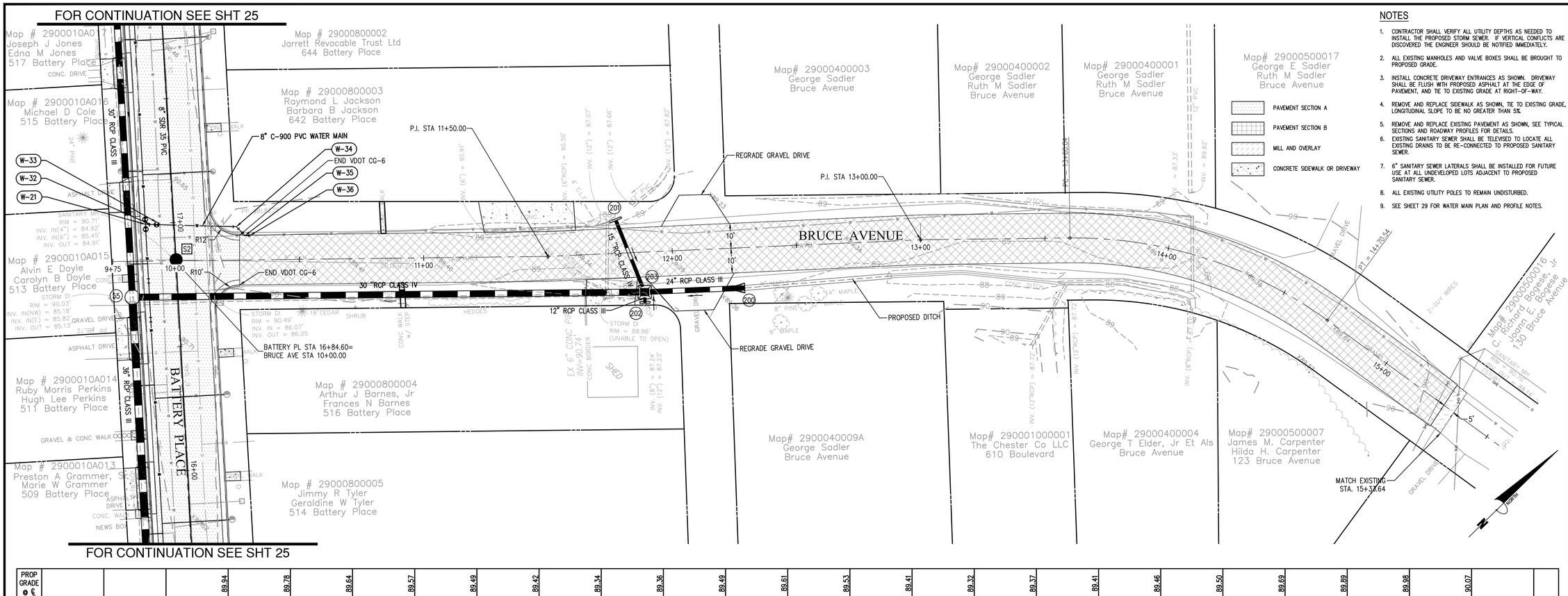

NOTES

1. CONTRACTOR SHALL VERIFY ALL UTILITY DEPTHS AS NEEDED TO INSTALL THE PROPOSED STORM SEWER. IF VERTICAL CONFLICTS ARE DISCOVERED THE ENGINEER SHOULD BE NOTIFIED IMMEDIATELY.
2. ALL EXISTING MANHOLES AND VALVE BOXES SHALL BE BROUGHT TO PROPOSED GRADE.
3. INSTALL CONCRETE DRIVEWAY ENTRANCES AS SHOWN. DRIVEWAY SHALL BE FLUSH WITH PROPOSED ASPHALT AT THE EDGE OF PAVEMENT, AND TIE TO EXISTING GRADE AT RIGHT-OF-WAY.
4. REMOVE AND REPLACE SIDEWALK AS SHOWN, TIE TO EXISTING GRADE, LONGITUDINAL SLOPE TO BE NO GREATER THAN 5%.
5. REMOVE AND REPLACE EXISTING PAVEMENT AS SHOWN, SEE TYPICAL SECTIONS AND ROADWAY PROFILES FOR DETAILS.
6. EXISTING SANITARY SEWER SHALL BE TELEVISED TO LOCATE ALL EXISTING DRAINS TO BE RE-CONNECTED TO PROPOSED SANITARY SEWER.
7. 6" SANITARY SEWER LATERALS SHALL BE INSTALLED FOR FUTURE USE AT ALL UNDEVELOPED LOTS ADJACENT TO PROPOSED SANITARY SEWER.
8. ALL EXISTING UTILITY POLES TO REMAIN UNDISTURBED.
9. SEE SHEET 29 FOR WATER MAIN PLAN AND PROFILE NOTES.

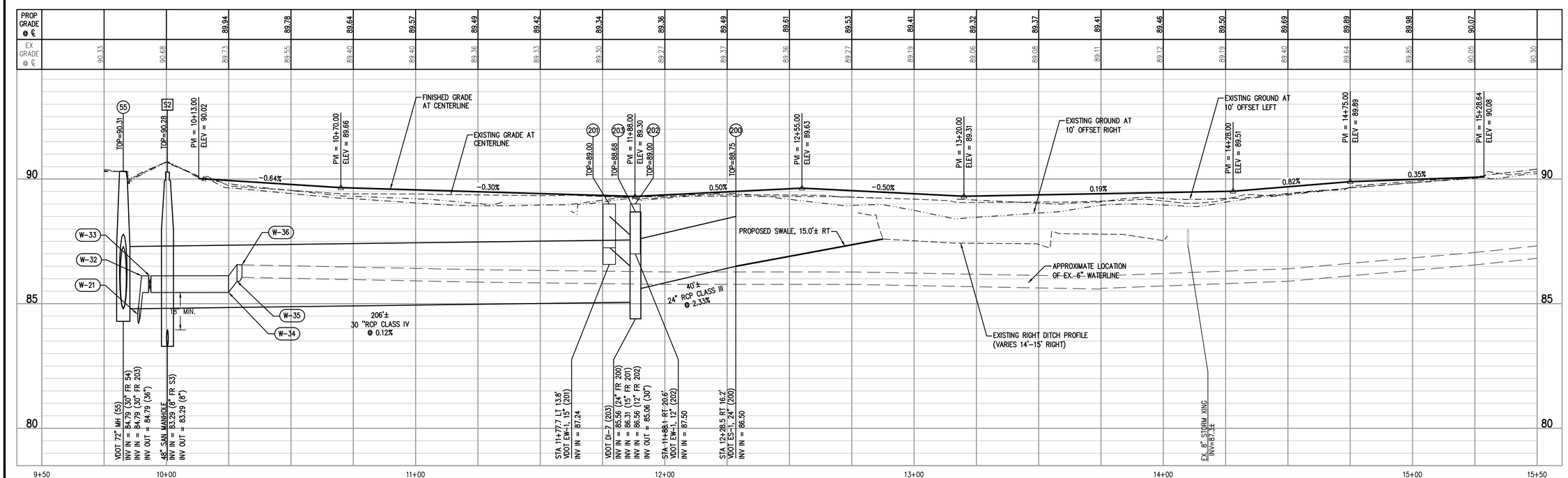

Bruce Ave PROFILE VIEW
HORIZONTAL SCALE: 1"=20'
VERTICAL SCALE: 1"=2'

GRAPHIC SCALE
(IN FEET)
1 inch = 20 ft.

COMMONWEALTH OF VIRGINIA
SPENCER M. FRANCIS
Lic. No. 043805
5/13/2015
PROFESSIONAL ENGINEER

Bowman CONSULTING
Bowman Consulting Group, Ltd.
www.bowmanconsulting.com

Bowman Consulting Group, Ltd.
3951 Westerre Parkway
Suite 150
Richmond, Virginia 23233
Phone: (804) 616-3240
Fax: (804) 270-2008

SUBMITTAL DATE
05/13/2015

DATE	REVISION
05/01/2015	PROGRESS SET
05/06/2015	BID SET
05/13/2015	FINAL BID SET

DRAWN DF, JD, JF, JW, MT
DESIGNED DF, JW, MT
CHECKED SF, JJ
SCALE 1" = 20'

CITY OF COLONIAL HEIGHTS
DEPARTMENT OF PUBLIC WORKS
ENGINEERING & DEVELOPMENT DIVISION

BRUCE AVENUE DRAINAGE IMPROVEMENTS
BRUCE AVENUE STA 10+00 TO STA 15+28

Path: P:\004956 - Colonial Heights On-Call\004956-01-009 (ENG) - Bruce_Battery\Engineering\Engineering Plans\4956-CP-009-RPP2.dwg, Plot Created May 13, 2015 - 11:45pm by mtomaszewski

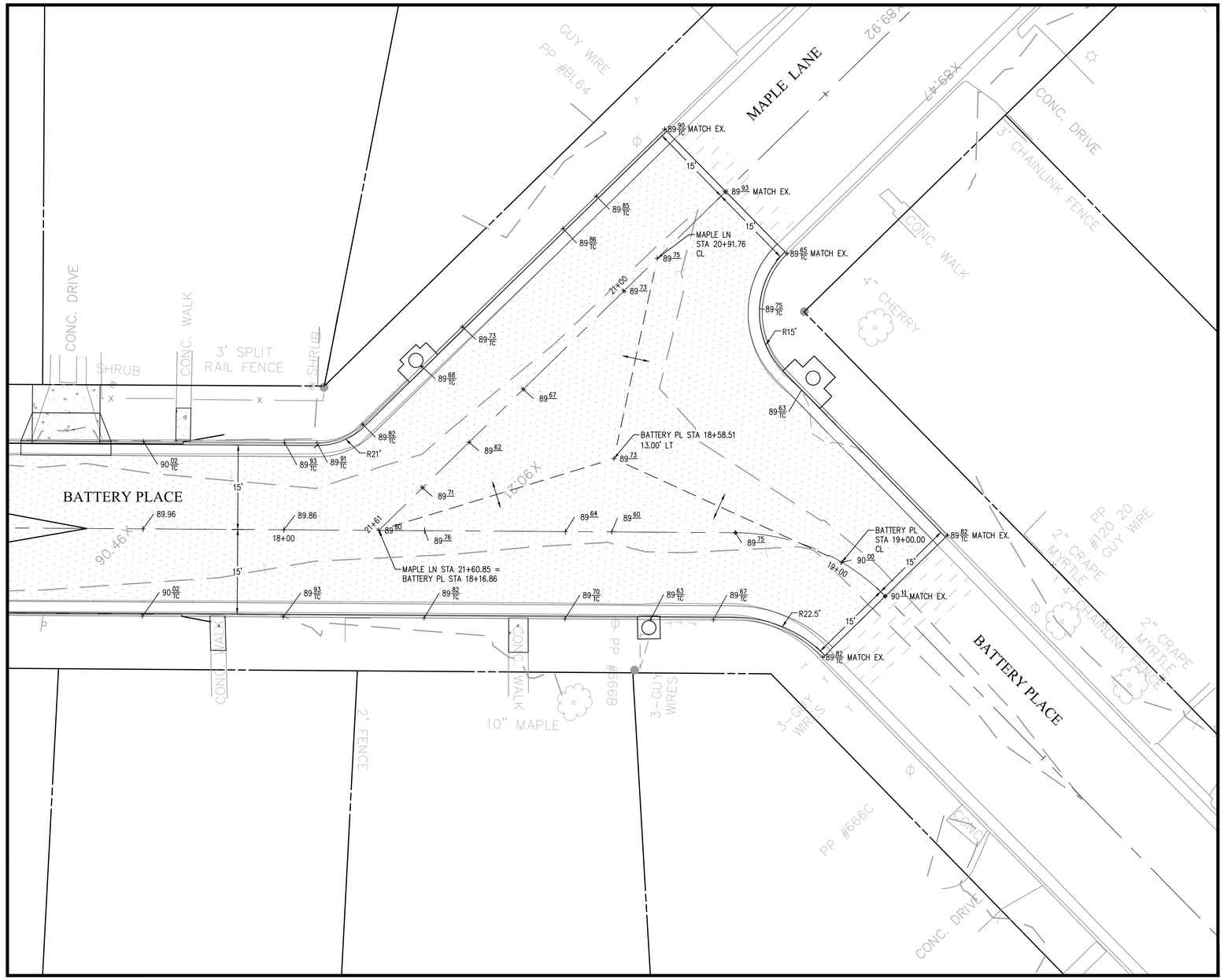

NOTE: PLEASE SEE SHEET 25 FOR ROAD AND DRAINAGE PROFILES.

INTERSECTION DETAIL
MAPLE LANE / BATTERY PLACE

GRAPHIC SCALE
10 0 5 10 20 40
(IN FEET)
1 inch = 10 ft.

COMMONWEALTH OF VIRGINIA
SPENCER M. FRANCIS
Lic. No. 043805
5/13/2015
PROFESSIONAL ENGINEER

Bowman CONSULTING
Bowman Consulting Group, Ltd.
www.bowmanconsulting.com

Bowman Consulting Group, Ltd.
3951 Westerre Parkway
Suite 150
Richmond, Virginia 23233
Phone: (804) 616-3240
Fax: (804) 270-2008

SUBMITTAL DATE
05/13/2015

DATE	REVISION
05/01/2015	PROGRESS SET
05/06/2015	BID SET
05/13/2015	FINAL BID SET

DRAWN DF, JD, JF, JW, MT
DESIGNED DF, JW, MT
CHECKED SF, JJ
SCALE 1" = 20'

CITY OF COLONIAL HEIGHTS
DEPARTMENT OF PUBLIC WORKS
ENGINEERING & DEVELOPMENT DIVISION

BRUCE AVENUE DRAINAGE IMPROVEMENTS
INTERSECTION DETAILS

SHEET NO.
27 OF 31

Path: P:\004956 - Colonial Heights On-Call\004956-01-009 (ENG) - Bruce_Battery\Engineering\Engineering Plans\4956-CP-009-INT.dwg, Plot Created May 13, 2015 - 11:52pm by mtomaszewski

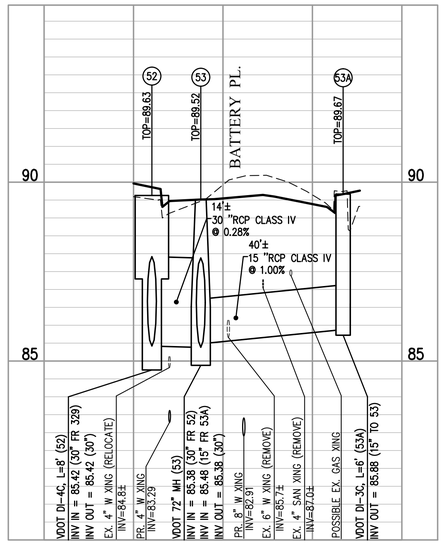

STORM SEWER 52 TO 53 PROFILE VIEW
HORIZONTAL SCALE: 1"=20'
VERTICAL SCALE: 1"=2'

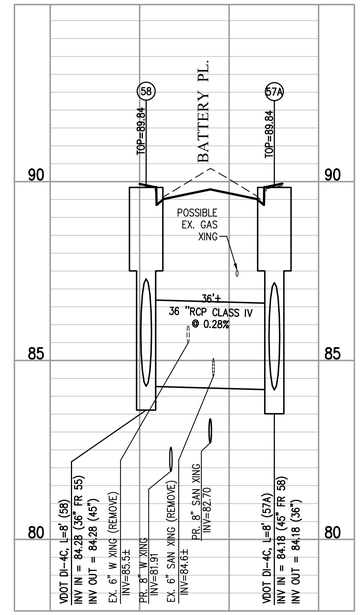

STORM SEWER 58 TO 57 PROFILE VIEW
HORIZONTAL SCALE: 1"=20'
VERTICAL SCALE: 1"=2'

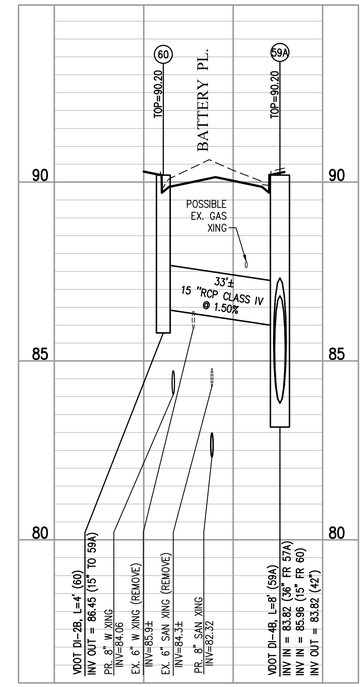

STORM SEWER 60 TO 59 PROFILE VIEW
HORIZONTAL SCALE: 1"=20'
VERTICAL SCALE: 1"=2'

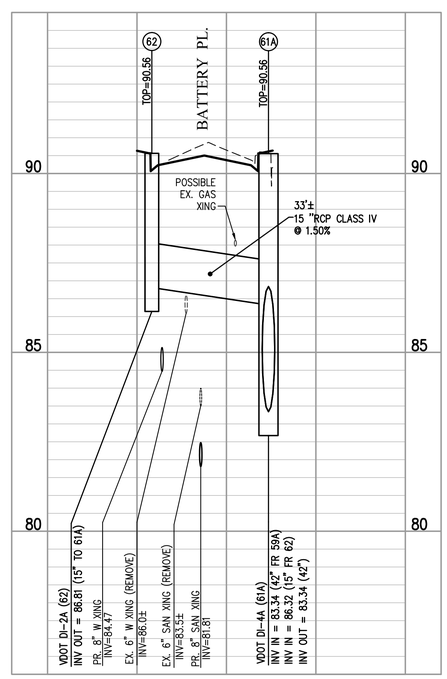

STORM SEWER 62 TO 61 PROFILE VIEW
HORIZONTAL SCALE: 1"=20'
VERTICAL SCALE: 1"=2'

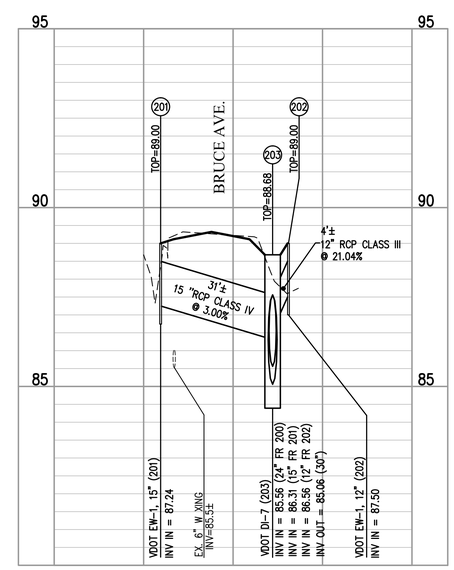

STORM 201 TO 203 PROFILE VIEW
HORIZONTAL SCALE: 1"=20'
VERTICAL SCALE: 1"=2'

COMMONWEALTH OF VIRGINIA
SPENCER M. FRANCIS
Lic. No. 043805
5/13/2015
PROFESSIONAL ENGINEER

Bowman CONSULTING
Bowman Consulting Group, Ltd.
www.bowmanconsulting.com

Bowman Consulting Group, Ltd.
3951 Westerre Parkway
Suite 150
Richmond, Virginia 23233
Phone: (804) 616-3240
Fax: (804) 270-2008

SUBMITTAL DATE
05/13/2015

DATE	REVISION
05/01/2015	PROGRESS SET
05/06/2015	BID SET
05/13/2015	FINAL BID SET

DRAWN
DF, JD, JF, JW, MT
DESIGNED
DF, JW, MT
CHECKED
SF, JJ
SCALE
1" = 20'

CITY OF COLONIAL HEIGHTS
DEPARTMENT OF PUBLIC WORKS
ENGINEERING & DEVELOPMENT DIVISION

BRUCE AVENUE DRAINAGE IMPROVEMENTS

STORM SEWER PROFILES

SHEET NO.
28 OF 31

Path: P:\004956 - Colonial Heights On-Call\004956-01-009 (ENG) - Bruce_Battery\Engineering\Engineering Plans\4956-CP-009-SPP.dwg, Plot Created May 13, 2015 - 11:59pm by mtomaszewski

WATER MAIN PLAN AND PROFILE NOTES:

SEE SHEETS 22 TO ## FOR PLAN AND PROFILE NOTE LOCATIONS

W-01
CONNECTION TO EXISTING
6" WATER MAIN WITH:
8" X 6" REDUCER, MJ
6" SLEEVE, MJ
STA 10+18.45, 10.1' LT
INV EL 86.80±

W-02
8" 45° BEND, MJ
STA 10+20.44, 10.1' LT
INV EL 86.70±

W-03
8" 45° BEND, MJ
STA 10+21.20, 11.8' LT
INV EL 86.61

W-04
8" WATER VALVE, MJ
STA 10+26.02, 11.7' LT
INV EL 86.60

W-05
8" 45° VERT BEND, MJ
STA 10+27.12, 11.7' LT
INV EL 86.58

W-06
8" 45° VERT BEND, MJ
STA 10+33.04, 11.7' LT
INV EL 80.66

W-07
8" 45° VERT BEND, MJ
STA 10+60.55, 11.8' LT
INV EL 80.66

W-08
8" 45° VERT BEND, MJ
STA 10+64.66, 11.8' LT
INV EL 84.78

W-09
8" X 6" TEE, MJ
STA 12+11.27, 11.9' LT
INV EL 84.43
INSTALL:
8' OF 6" WATER MAIN
HYDRANT W/ AUXILIARY VALVE
STA 12+11.27, 20.3' LT

W-10
8" 11.25° BEND, MJ
STA 13+71.78, 11.0' LT
INV EL 84.04

W-11
8" X 6" TEE, MJ
STA 14+62.23, 11.0' LT
INV EL 83.75
INSTALL:
6' OF 6" WATER MAIN
HYDRANT W/ AUXILIARY VALVE
STA 14+62.23, 18.0' LT

W-12
8" 45° VERT BEND, MJ
STA 14+81.61, 11.0' LT
INV EL 83.68

W-13
8" 45° VERT BEND, MJ
STA 14+83.79, 11.0' LT
INV EL 81.92

W-14
8" 45° VERT BEND, MJ
STA 14+93.79, 11.0' LT
INV EL 81.92

W-15
8" 45° VERT BEND, MJ
STA 14+96.02, 11.0' LT
INV EL 83.73

W-16
8" 45° VERT BEND, MJ
STA 16+60.61, 11.1' LT
INV EL 84.22

W-17
8" 45° VERT BEND, MJ
STA 16+62.33, 11.1' LT
INV EL 82.92

W-18
8" 45° VERT BEND, MJ
STA 16+78.77, 11.1' LT
INV EL 82.92

W-19
8" 45° VERT BEND, MJ
STA 16+80.05, 11.1' LT
INV EL 84.20

W-20
8" WATER VALVE, MJ
STA 16+97.91, 11.1' LT
INV EL 84.21

W-21
8" X 8" TEE, MJ
STA 16+99.91, 11.1' LT (BATTERY)
STA 9+88.81, 12.8' LT (BRUCE)
INV EL 84.21

W-22
8" WATER VALVE, MJ
STA 17+01.91, 11.1' LT
INV EL 84.21

W-23
8" X 6" TEE, MJ
STA 18+14.56, 11.0' LT
INV EL 83.45
INSTALL:
12' OF 6" WATER MAIN
HYDRANT W/ AUXILIARY VALVE
STA 18+14.56, 23.4' LT

W-24
8" X 8" TEE, MJ
STA 18+45.25, 11.0' LT
INV EL 83.13
CONNECTION TO EXISTING
6" WATER MAIN WITH:
26' OF 8" WATER MAIN
3-45° VERT BENDS, MJ
8" 45° BEND, MJ
8" x 6" REDUCER, MJ
6" SLEEVE, MJ
STA 18+46.46, 35.9' LT
INV EL 85.50±

W-25
8" 45° BEND, MJ
STA 18+69.12, 11.0' LT
INV EL 82.95

W-26
8" 45° VERT BEND, MJ
STA 18+87.68, 2.4' RT
INV EL 82.91

W-27
8" 45° VERT BEND, MJ
STA 18+90.32, 4.0' RT
INV EL 85.12

W-28
8" WATER VALVE, MJ
STA 18+92.20, 7.9' RT
INV EL 85.12

W-29
8" 45° BEND, MJ
STA 19+11.11, 11.1' RT
INV EL 85.12

W-30
8" 45° BEND, MJ
STA 19+19.93, 4.2' RT
INV EL 85.50±

W-31
CONNECTION TO EXISTING
6" WATER MAIN WITH:
8" X 6" REDUCER, MJ
6" SLEEVE, MJ
STA 19+19.92, 4.2' RT
INV EL 85.60±

W-32
8" 45° VERT BEND, MJ
STA 9+90.05, 12.7' LT
INV EL 85.45

W-33
8" WATER VALVE, MJ
STA 9+93.32, 12.6' LT
INV EL 85.45

W-34
8" 45° BEND, MJ
STA 10+24.94, 11.4' LT
INV EL 85.45

W-35
8" 45° BEND, MJ
STA 10+28.32, 7.8' LT
INV EL 85.90±

W-36
CONNECTION TO EXISTING
6" WATER MAIN WITH:
8" X 6" REDUCER, MJ
6" SLEEVE, MJ
STA 10+30.32, 7.8' LT
INV EL 86.10±

NOTES

1. NEW WATER SERVICE LINES SHALL BE PROVIDED FROM THE PROPOSED WATER MAIN TO EACH EXISTING OR RELOCATED METER BOX.
2. WHERE EXISTING METER BOXES CONFLICT WITH PROPOSED CONSTRUCTION, NEW METER BOXES SHALL BE PROVIDED. COORDINATE LOCATION OF NEW METER BOXES WITH CITY OF COLONIAL HEIGHTS.

COMMONWEALTH OF VIRGINIA
SPENCER M. FRANCIS
Lic. No. 043805
5/13/2015
PROFESSIONAL ENGINEER

Bowman CONSULTING
Bowman Consulting Group, Ltd.
www.bowmanconsulting.com

Bowman Consulting Group, Ltd.
3951 Westerre Parkway
Suite 150
Richmond, Virginia 23233
Phone: (804) 616-3240
Fax: (804) 270-2008

SUBMITTAL DATE
05/13/2015

DATE	REVISION
05/01/2015	PROGRESS SET
05/06/2015	BID SET
05/13/2015	FINAL BID SET

DRAWN DF, JD, JF, JW, MT
DESIGNED DF, JW, MT
CHECKED SF, JJ
SCALE NONE

CITY OF COLONIAL HEIGHTS
DEPARTMENT OF PUBLIC WORKS
ENGINEERING & DEVELOPMENT DIVISION

BRUCE AVENUE DRAINAGE IMPROVEMENTS
WATERMAIN NOTES

SHEET NO.
29 OF 31

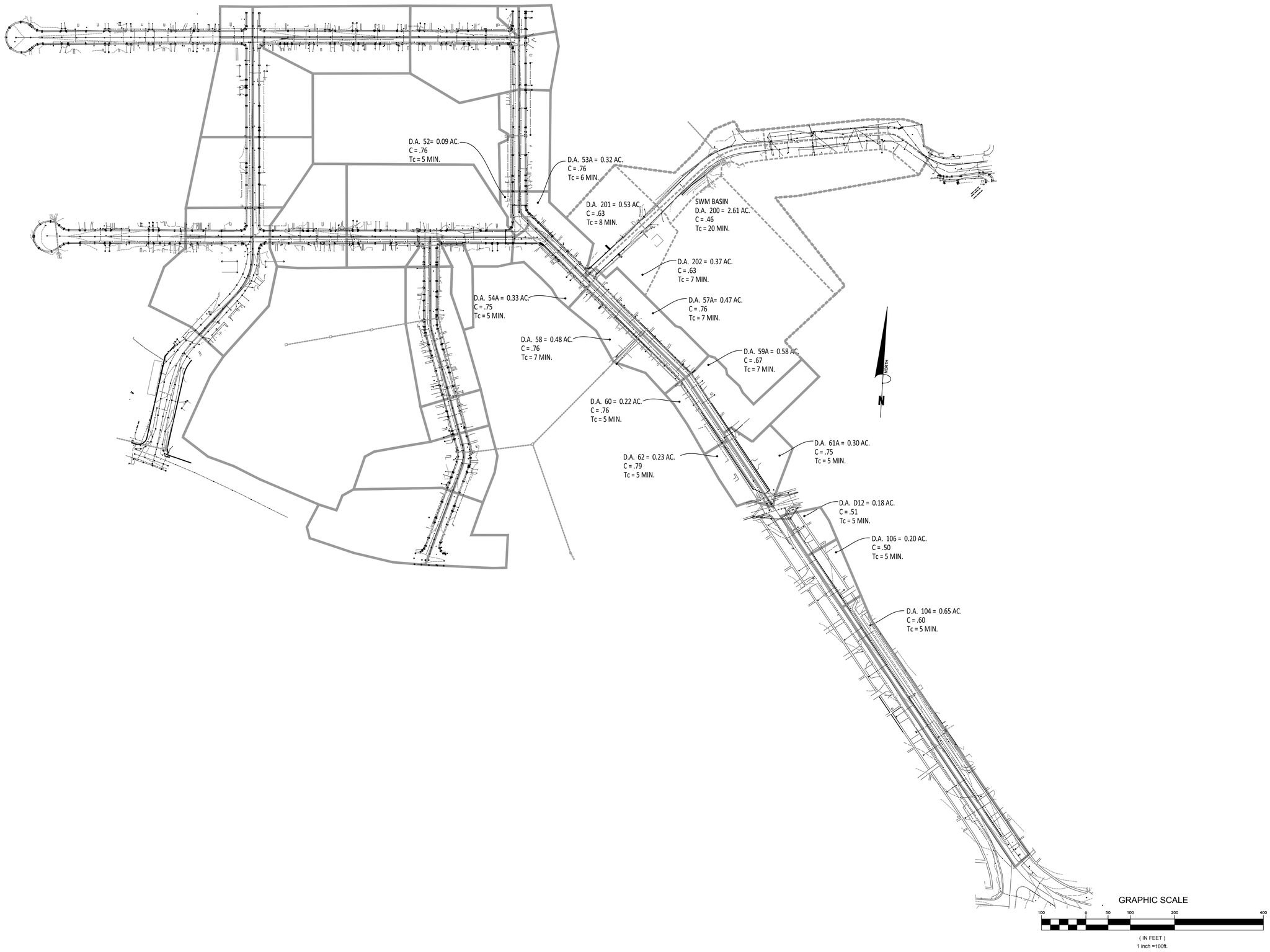

COMMONWEALTH OF VIRGINIA
SPENCER M. FRANCIS
Lic. No. 043805
5/13/2015
PROFESSIONAL ENGINEER

Bowman CONSULTING
Bowman Consulting Group, Ltd.
www.bowmanconsulting.com

Bowman Consulting Group, Ltd.
3951 Westerre Parkway
Suite 150
Richmond, Virginia 23233
Phone: (804) 616-3240
Fax: (804) 270-2008

SUBMITTAL DATE
05/13/2015

DATE	REVISION
05/01/2015	PROGRESS SET
05/06/2015	BID SET
05/13/2015	FINAL BID SET

CITY OF COLONIAL HEIGHTS
DEPARTMENT OF PUBLIC WORKS
ENGINEERING & DEVELOPMENT DIVISION

DRAWN
DF, JD, JF, JW, MT
DESIGNED
DF, JW, MT
CHECKED
SF, JJ
SCALE
1" = 100'

CITY OF COLONIAL HEIGHTS

BRUCE AVENUE DRAINAGE IMPROVEMENTS

DRAINAGE AREAS

SHEET NO.
30 OF 31

BATTERY PLACE OUTFALL -10Yr

Line ID	Incr. Area (ac)	Total Area (ac)	Runoff Coeff. (C)	Incr C x A	Total C x A	Time Conc (min)	Rnfal Int (in/hr)	Total Runoff (cfs)	Total Flow (cfs)	Capacity Full (cfs)	Velocity (ft/s)	Inv Elev Dn (ft)	Inv Elev Up (ft)	HGL Dn (ft)	HGL Up (ft)	Grnd/Rim Dn (ft)	Grnd/Rim Up (ft)
64B-64A	0.00	10.26	0.00	0.00	6.70	26.80	3.60	24.45	24.45	57.94	3.06	82.73	82.93	85.53	85.55	90.78	91.15
D14-64B	0.30	0.30	0.75	0.23	0.23	5.00	7.00	1.58	1.58	6.69	5.34	87.63	88.04	87.96	88.57	91.15	91.04
61A-64B	0.30	9.96	0.75	0.23	6.48	25.80	3.70	24.09	24.09	57.54	3.17	82.93	83.34	85.71	85.76	91.15	90.56
306	0.58	9.43	0.67	0.39	6.07	24.70	3.80	23.12	23.12	57.71	3.22	83.34	83.82	86.03	86.07	90.56	90.20
57A to 59A	0.47	8.63	0.76	0.36	5.51	24.00	3.90	21.31	21.31	38.35	3.53	83.82	84.18	86.37	86.44	90.20	89.84
58-57A	0.48	8.16	0.76	0.36	5.16	23.80	3.90	20.02	20.02	38.17	3.13	84.18	84.28	86.77	86.78	89.84	89.84
55-58	0.00	7.68	0.00	0.00	4.79	22.70	4.00	19.05	19.05	38.23	3.04	84.28	84.79	87.02	87.10	89.84	90.31
203-55	0.00	3.51	0.00	0.00	1.77	20.60	4.20	7.38	7.38	16.08	1.54	84.79	85.04	87.27	87.31	90.31	88.79
200-203	2.61	2.61	0.46	1.20	1.20	20.00	4.20	5.08	5.08	27.71	3.69	86.29	87.00	87.35	87.79	88.79	0.00
201-203	0.53	0.53	0.63	0.33	0.33	8.00	6.10	2.05	2.05	11.06	2.80	86.29	87.00	87.35	87.57	88.79	88.52
62-61A	0.23	0.23	0.79	0.18	0.18	5.00	7.00	1.27	1.27	8.58	4.13	86.32	86.81	86.65	87.26	90.56	90.56
54-55	0.00	4.17	0.00	0.00	3.03	17.30	4.50	13.71	13.71	23.44	2.91	84.79	85.21	87.27	87.38	90.31	89.35
315	0.00	3.84	0.00	0.00	2.78	16.90	4.60	12.73	12.73	23.51	2.75	85.21	85.38	87.52	87.55	89.35	89.52
52-53	3.52	3.52	0.72	2.53	2.53	16.80	4.60	11.64	11.64	24.04	2.48	85.38	85.42	87.68	87.68	89.52	89.63
60-59A	0.22	0.22	0.76	0.17	0.17	5.00	7.00	1.17	1.17	8.58	3.29	85.96	86.45	86.37	86.88	90.20	90.20
54A-54	0.33	0.33	0.75	0.25	0.25	5.00	7.00	1.74	1.74	8.66	1.42	85.74	85.93	87.52	87.53	89.35	89.68
53A-53	0.32	0.32	0.76	0.24	0.24	6.00	6.70	1.63	1.63	7.01	1.33	85.48	85.88	87.68	87.70	89.52	89.67
202-203	0.37	0.37	0.63	0.23	0.23	7.00	6.40	1.49	1.49	17.63	2.94	86.56	87.50	87.35	88.02	88.79	88.79

Line ID	Incr. Area (ac)	Total Area (ac)	Runoff Coeff. (C)	Incr C x A	Total C x A	Time Conc (min)	Rnfal Int (in/hr)	Total Runoff (cfs)	Total Flow (cfs)	Capacity Full (cfs)	Velocity (ft/s)	Inv Elev Dn (ft)	Inv Elev Up (ft)	HGL Dn (ft)	HGL Up (ft)	Grnd/Rim Dn (ft)	Grnd/Rim Up (ft)
D13-65A	0.00	1.03	0.00	0.00	0.58	7.60	6.20	3.63	18.36	24.50	5.88	82.69	82.92	84.74	84.85	90.78	90.90
D12-D13	0.18	1.03	0.51	0.09	0.58	7.50	6.30	3.66	13.09	0.00	4.17	83.02	83.00	85.12	85.24	90.90	91.10
106-D12	0.20	0.85	0.50	0.10	0.49	6.60	6.50	3.19	3.19	11.39	3.20	84.50	85.44	85.60	86.12	91.10	91.38
105-106	0.00	0.65	0.00	0.00	0.39	5.20	6.90	2.71	2.71	11.38	3.69	85.44	86.75	86.12	87.37	91.38	92.67
104-105	0.65	0.65	0.60	0.39	0.39	5.00	7.00	2.74	2.74	11.48	3.92	86.75	86.94	87.37	87.57	92.67	92.50
D11-D12	0.00	0.00	0.00	0.00	0.00	0.00	0.00	0.00	9.43	11.35	5.34	82.76	83.05	85.60	85.80	91.10	91.10

STORM SEWER SCHEDULE

Structure		Invert Elevations		Pipe Length	Pipe Slope	Pipe Diam.	From Structure Depth	From Structure Type	From Throat Length	Pipe Material	ST-1 Required	IS-1 Required	Remarks
From	To	Upper	Lower	(ft.)	(ft./ft.)	(in.)	(ft.)	(ft.)	(ft.)				
EX. 15"	52	85.47	85.42	16.9	0.0028	30						Yes	
52	53	85.42	85.38	13.7	0.0028	30	4.21	DI-4C	8	RCP	Yes	Yes	
53A	53	85.88	85.48	39.8	0.0100	15	3.79	DI-3C	6	RCP CL IV		Yes	
53	54	85.38	85.21	62.2	0.0028	30	4.14	72" MH		RCP	Yes	Yes	
54A	54	85.93	85.74	12.4	0.0150	15	3.75	DI-3C	6	RCP CL IV		Yes	
54	55	85.21	84.78	154.5	0.0028	30	4.14	72" MH		RCP	Yes	Yes	
200	203	86.50	85.56	40.3	0.0233	24		ES-1		RCP CL III			
201	203	87.24	86.31	31.0	0.0300	15		EW-1		RCP CL IV			
202	203	87.50	86.56	4.5	0.2104	12		EW-1		RCP CL III			
203	55	85.04	84.79	206.0	0.0013	30	3.62	DI-7		RCP CL IV		Yes	
55	58	84.78	84.28	178.6	0.0028	36	5.52	72" MH		RCP CL III	Yes	Yes	
58	57A	84.28	84.18	35.8	0.0028	45x29	5.56	DI-4C	8	RCP	Yes	Yes	
57A	59A	84.18	83.82	127.8	0.0028	36	5.66	DI-4C	8	RCP CL III	Yes	Yes	
60	59A	86.45	85.96	32.6	0.0150	15	3.75	DI-2B	4	RCP CL IV		Yes	
59A	61A	83.82	83.34	171.2	0.0028	42	6.38	DI-4B	8	RCP CL III	Yes	Yes	
62	61A	86.81	86.32	32.6	0.0150	15	3.75	DI-2A		RCP CL IV		Yes	
61A	64B	83.34	82.93	147.1	0.0028	42	7.22	DI-4A		RCP CL III	Yes	Yes	
EXD14	64B	88.04	87.63	13.6	0.0300	12	3.00	EX-DI		RCP CL III		Yes	
EXD15		86.68	84.94	10.5	0.1657	12	4.48	EX-DI		RCP CL IV		Yes	
64B	64A	82.93	82.73	70.8	0.0028	53x34	8.22	84" MH		RCP CL III	Yes	Yes	
104	105	85.71	85.62	18.6	0.0050	18	6.79	DI-2A		RCP CL III	Yes	Yes	
105	106	85.62	84.97	130.9	0.0050	18	7.05	48" MH		RCP CL III	Yes	Yes	
106	EXD12	84.97	84.50	93.8	0.0050	18	6.41	DI-1		RCP CL III	Yes	Yes	

INLET SPREAD CALCULATIONS

INLET			STATION	Q INCR. (CFS; CMS)	Qc CARRYOVER (CFS; CMS)	QT GUTTER FLOW (CFS; CMS)	S GUTTER SLOPE (FT/FT; M/M)	Sx CROSS SLOPE (FT/FT; M/M)	T (SPREAD) (FT; M)	W, GUTTER WIDTH (FT; M)	W/T	Sw (GUTTER SLOPE) (FT/FT; M/M)	Sw/Sx	Eo (App. 9C-8)	a	Sw	Se	COMPUTED LENGTH L_T (FT; M)	L_s SPECIFIED LENGTH (FT; M)	L/LT	E (App. 9C-1.8)	Q INTERCEPTED (CFS; CMS) or dh	Qb CARRYOVER (CFS; CMS)	Depth at Curb (IN; MM)	Sag Inlets Only: Allowable Ponding Depth d (FT; M)	Sag Inlets Only: Height of Curb Opening h (FT; M)	Sag Inlets Only: d/h	Sag Inlets Only: Depth at Inlet (IN; MM)	Sag Inlets Only: T SPREAD @ SAG (FT; M)	REMARKS
NUMBER	TYPE	LENGTH (FT; M)																												
104	DI-2A	2.000																												Back/Lt.
			0.000'RIGHT	0.844	0		0.0100	0.0208	4.581	2.000	0.43659	0.0833	4.00481		3.50															Back/Lt.
																														Ahead/Rt.
				0.844	0																									Ahead/Rt.
						1.688	0.0100			2.000								2			1.688		3.000	0.166	0.01383	12.00289	5.125	12.021	T > 8.0 ft
52	DI-4C	2.000		0.14	0		0.0030	0.0208	1.734	2.000	1.1534	0.0833	4.00481		3.50															Back/Lt.
			0.000'RIGHT	0.14	0																									Ahead/Rt.
						0.280	0.0030											2			0.280		0.934	0.166	0.01383	12.00289	2.934	3.740	Weir Flow
53A	DI-3A	6.000		1.1	0	1.100	0.0048	0.0208	6.776	2.000	0.29516	0.0833	4.00481	0.763	3.50	0.1458	0.1320	5.271	6.000	1.138	1.000	1.100	0.000	3.191						
			0'RIGHT																											
54A	DI-3C	2.000		0.5	0		0.0030	0.0208	4.841	2.000	0.41314	0.0833	4.00481		3.50															Back/Lt.
			0.000'RIGHT	0.5	0																									Ahead/Rt.
						1.000	0.0030											2			1.000		2.182	0.166	0.01383	12.00289	4.182	8.742	T > 8.0 ft
57A	DI-4C	2.000		0.72	0		0.0030	0.0208	6.094	2.000	0.32819	0.0833	4.00481		3.50															Back/Lt.
			0.000'RIGHT	0.72	0																									Ahead/Rt.
						1.440	0.0030											2			1.440		2.783	0.166	0.01383	12.00289	4.783	11.149	T > 8.0 ft
58	DI-4C	2.000		0.73	0		0.0030	0.0208	6.142	2.000	0.32563	0.0833	4.00481		3.50															Back/Lt.
			0.000'RIGHT	0.73	0																									Ahead/Rt.
						1.460	0.0030											2			1.460		2.809	0.166	0.01383	12.00289	4.809	11.252	T > 8.0 ft
59A	DI-4A	8.000		1.37	0	1.370	0.0100	0.0208	6.240	2.000	0.32051	0.0833	4.00481	0.800	3.50	0.1458	0.1374	7.032	8.000	1.138	1.000	1.370	0.000	3.058						
			0'RIGHT																											
60	DI-2A	4		0.67	0	0.670	0.0026	0.0208	6.092	2.000	0.3283	0.0833	4.00481	0.810	3.50	0.1458	0.1389	3.453	4	1.158	1.000	0.670	0.000	3.021						
			0'RIGHT																											
61A	DI-4A	2.000		0.45	0		0.0030	0.0208	4.492	2.000	0.44524	0.0833	4.00481		3.50															Back/Lt.
			0.000'RIGHT	0.45	0																									Ahead/Rt.
						0.900	0.0030											2			0.900		2.034	0.166	0.01383	12.00289	4.034	8.149	T > 8.0 ft
62	DI-2A	2.000		0.37	0		0.0030	0.0208	3.854	2.000	0.51894	0.0833	4.00481		3.50															Back/Lt.
			0.000'RIGHT	0.37	0																									Ahead/Rt.
						0.740	0.0030			2.000								2			0.740		1.429	0.166	0.01383	12.00289	3.554	5.726	Weir Flow

COMMONWEALTH OF VIRGINIA
SPENCER M. FRANCIS
Lic. No. 043805
5/13/2015
PROFESSIONAL ENGINEER

Bowman CONSULTING
Bowman Consulting Group, Ltd.
www.bowmanconsulting.com

Bowman Consulting Group, Ltd.
3951 Westerre Parkway
Suite 150
Richmond, Virginia 23233
Phone: (804) 616-3240
Fax: (804) 270-2008

SUBMITTAL DATE
05/13/2015

DATE	REVISION
05/01/2015	PROGRESS SET
05/06/2015	BID SET
05/13/2015	FINAL BID SET

DRAWN DF, JD, JF, JW, MT
DESIGNED DF, JW, MT
CHECKED SF, JJ
SCALE NONE

CITY OF COLONIAL HEIGHTS
DEPARTMENT OF PUBLIC WORKS
ENGINEERING & DEVELOPMENT DIVISION

BRUCE AVENUE DRAINAGE IMPROVEMENTS
DRAINAGE CALCULATIONS

SHEET NO.
31 OF 31