MH-1

NOTES:
THE LETTERS V.D.O.T. ARE OPTIONAL, IF USED THE LETTERS ARE TO BE CAST IN THE DEPRESSION IN TOP OF COVER 1" WIDE AND RAISED ⅜" HIGH AS SHOWN.

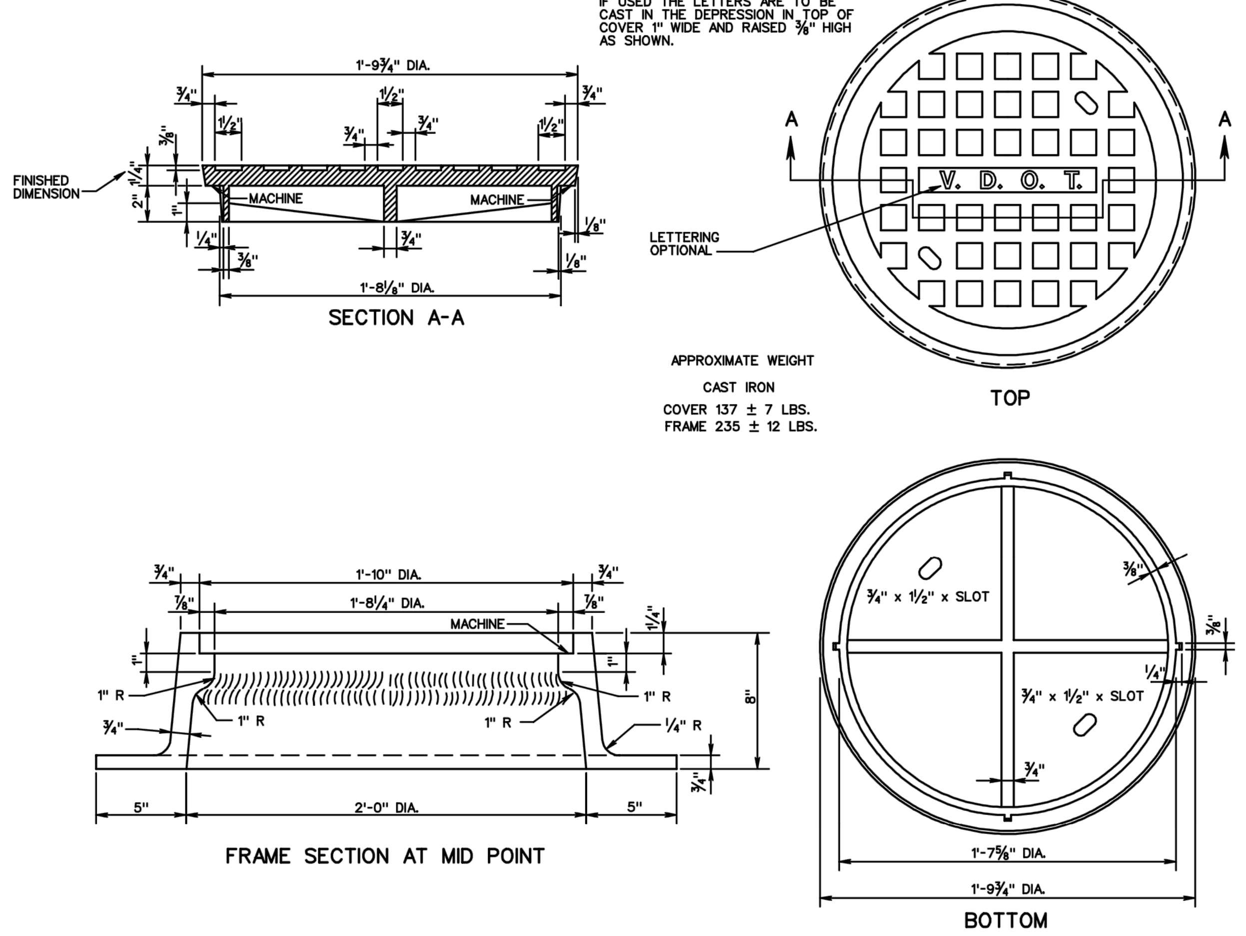

APPROXIMATE WEIGHT
CAST IRON
COVER 137 ± 7 LBS.
FRAME 235 ± 12 LBS.

SPECIFICATION REFERENCE 224 302

STANDARD MANHOLE FRAME AND COVER

VIRGINIA DEPARTMENT OF TRANSPORTATION

VDOT ROAD AND BRIDGE STANDARDS | REVISION DATE | SHEET 3 OF 5 | 106.03

ST-1

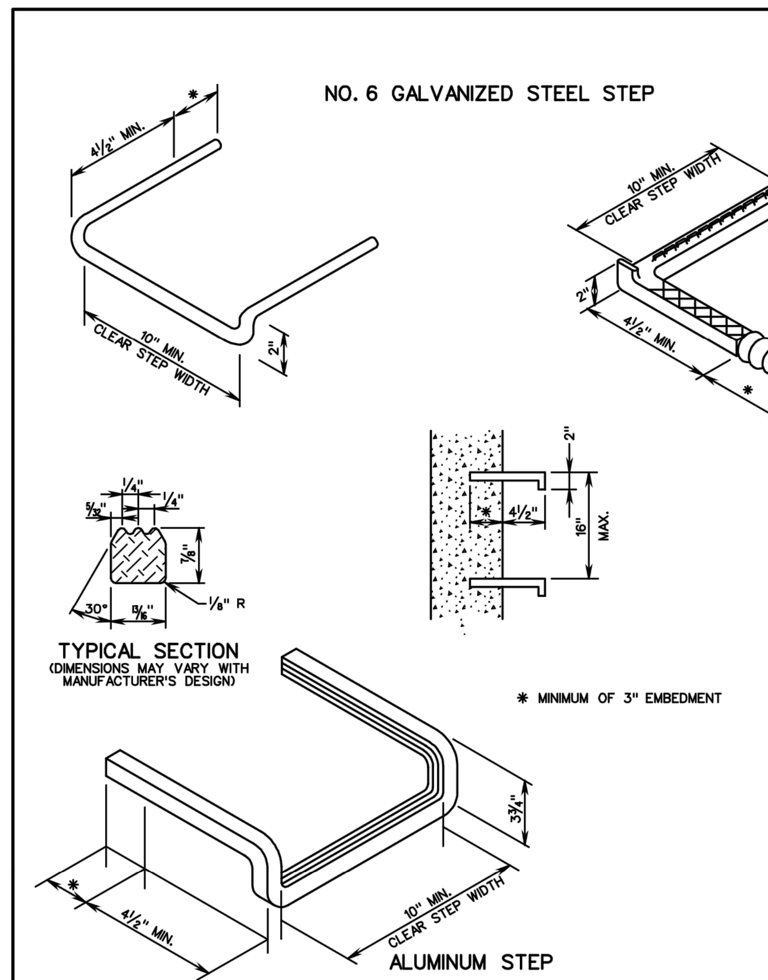

#4, GRADE 60, REINFORCING ROD ENCASED IN A CORROSION RESISTANT RUBBER OR OTHER MATERIAL APPROVED BY THE ENGINEER. (DIMENSION MAY VARY WITH MANUFACTURER'S DESIGN)

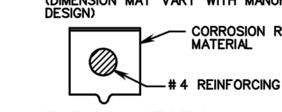

TYPICAL SECTION

NOTES:
STEPS WILL BE REQUIRED IN ALL STRUCTURES WITH A DEPTH OF 4'-0" OR GREATER UNLESS OTHERWISE NOTED ON THE PLANS.

ALL STEPS SHALL PROTRUDE 4½" FROM INSIDE FACE OF STRUCTURE WALL.

MAXIMUM STEP SPACING TO BE 16" C-C.

STEPS SHALL WITHSTAND A MINIMUM FORCE OF 300 POUNDS WHEN EXTENDED 4½" FROM THE FACE OF THE SUPPORT.

STEPS ARE TO BE VERTICALLY ALIGNED AND UNIFORMALY SPACED FOR THE ENTIRE DEPTH OF ANY STRUCTURE.

IN PRECAST UNITS STEPS MAY BE CAST IN PLACE, MORTARED INTO HOLES PROVIDED BY THE FABRICATOR, OR DRIVEN.

STEPS DIFFERING IN DIMENSIONS, CONFIGURATION, OR MATERIALS FROM THOSE SHOWN MAY ALSO BE USED PROVIDED THEY MEET THE MINIMUM REQUIREMENTS SHOWN HEREON AND THE CONTRACTOR HAS FURNISHED THE ENGINEER WITH DETAILS AND CERTIFIED TEST REPORTS OF THE PROPOSED SUBSTITUTE AND HAS RECEIVED WRITTEN APPROVAL FROM THE ENGINEER FOR THE USE OF SUCH STEPS.

ALL STEPS INSTALLED SHALL BE PROVIDED WITH SLIP-RESISTANT SURFACES SUCH AS BUT NOT LIMITED TO, CORRUGATED KNURLED, OR DIMPLED SURFACES.

ALUMINUM STEPS SHALL BE FABRICATED IN ACCORDANCE WITH ASTM B221, ALLOY 6005-T5. THAT PORTION OF THE STEP ENCASED IN MASONRY SHALL BE UNIFORMLY COATED WITH A BITUMIMOUS, SOLVENT TYPE, ASBESTOS FILLED ALUMINUM PIGMENTED COATING CONFORMING TO FEDERAL SPECIFICATION TC-C-00498A.

SPECIFICATION REFERENCE

STANDARD STEP

VIRGINIA DEPARTMENT OF TRANSPORTATION

VDOT ROAD AND BRIDGE STANDARDS | REVISION DATE | SHEET 1 OF 1 | 106.09

T-DI-2

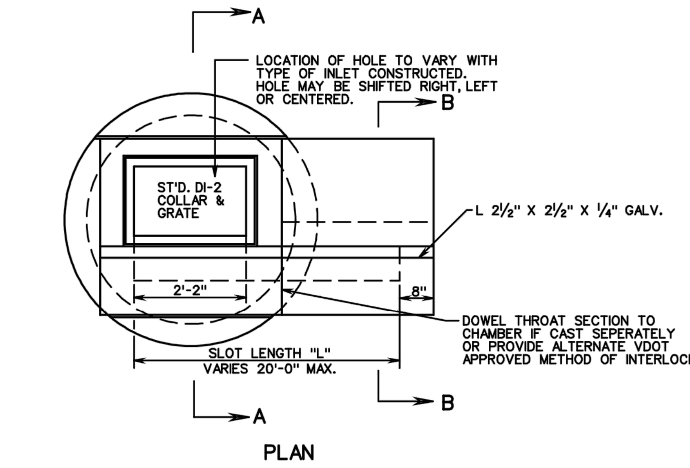

RECOMMENDED MINIMUM HEIGHT CHART	
PIPE SIZE	"H" DIMENSION (CONCRETE PIPE)
12"	4'-8"
15"	4'-11¼"
18"	5'-2½"
21"	5'-5¾"
24"	5'-9"
27"	6'-0¼"
30"	6'-6½"
33"	6'-9¾"
36"	7'-1"
42"	7'-7½"
48"	8'-2"

NOTES
1. SEE GENERAL NOTES - PRECAST FOR ADDITIONAL DETAILS.
2. CONCRETE TO BE 4000 PSI MINIMUM.
3. REINFORCING STEEL IN ACCORDANCE WITH ASTM-615.
4. DIMENSIONS SHOWN ARE MINIMUM. ACTUAL DIMENSIONS MAY VARY WITH MANUFACTURER.
5. FOR DETAILS OF FRAME AND GRATE SEE STANDARD DI-2A, B, C.
✱ 6. VERTICAL REINFORCING BARS TO BE CONTINUOUS THROUGH JOINT.
7. STANDARD ST-1 STEPS NOT REQUIRED IN THIS TOP UNIT.

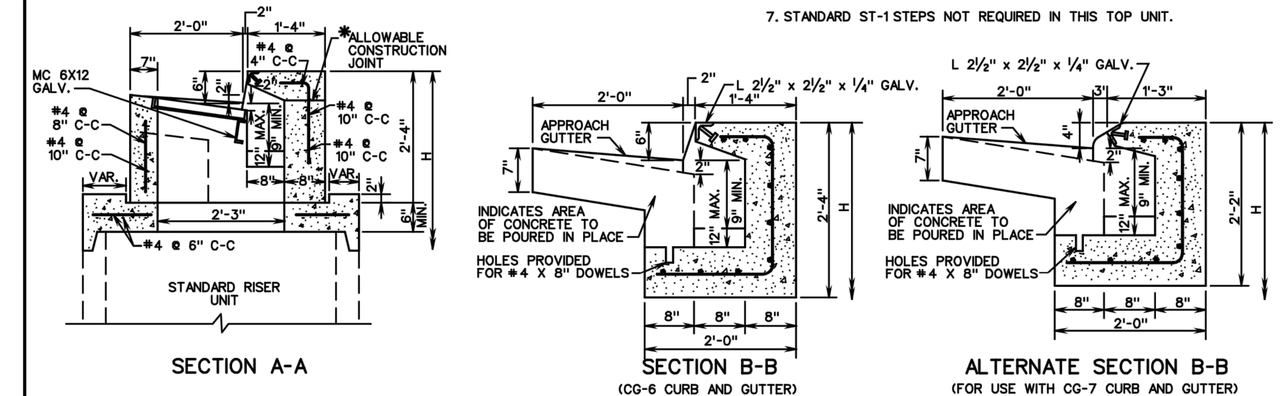

SPECIFICATION REFERENCE 105 233 302

STANDARD PRECAST TOP UNITS

VIRGINIA DEPARTMENT OF TRANSPORTATION

VDOT ROAD AND BRIDGE STANDARDS | REVISION DATE | SHEET 1 OF 1 | 103.04

MH-1

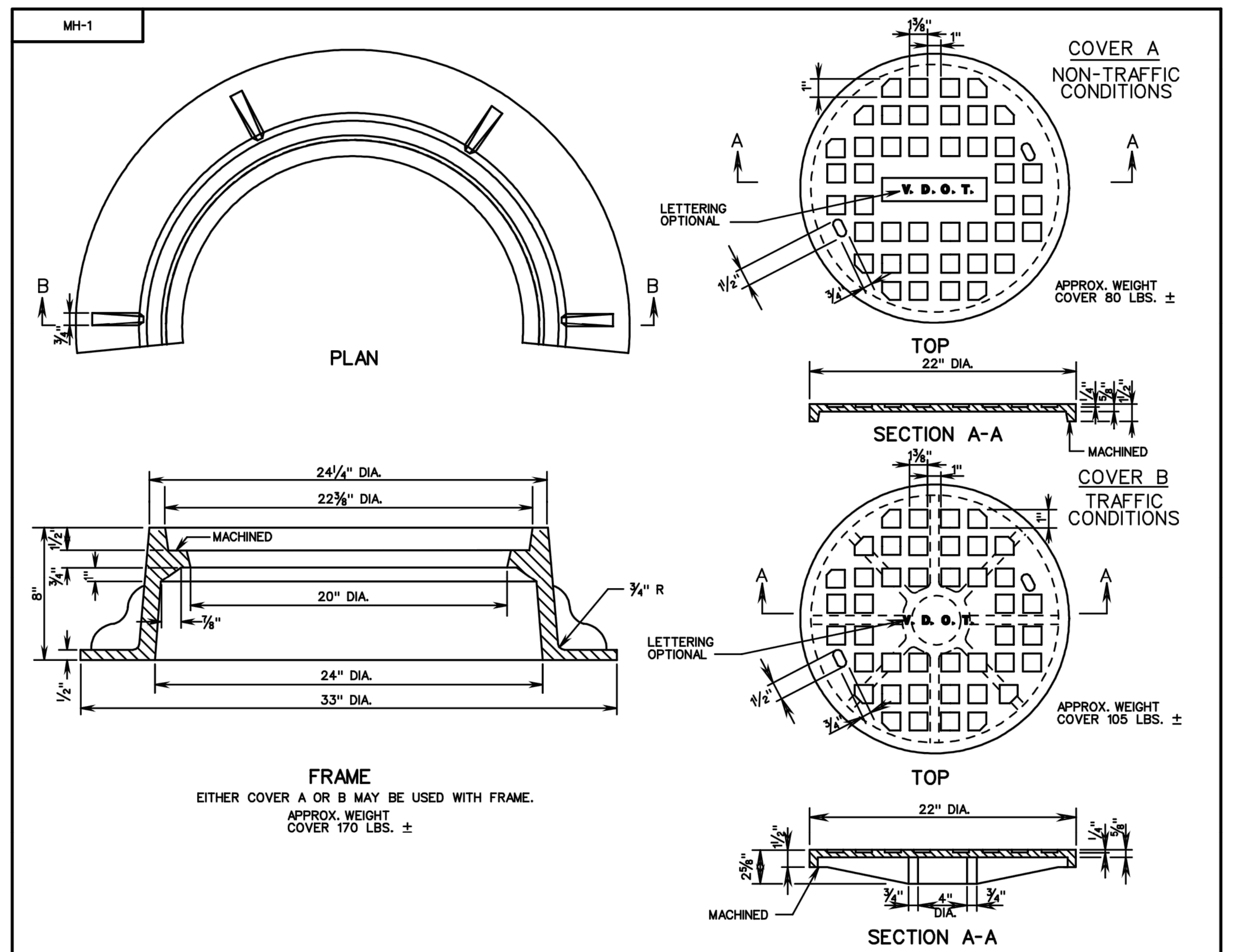

FRAME
EITHER COVER A OR B MAY BE USED WITH FRAME.
APPROX. WEIGHT COVER 170 LBS. ±

VDOT ROAD AND BRIDGE STANDARDS | SHEET 4 OF 5 | 106.04 | REVISION DATE

STANDARD MANHOLE FRAME AND COVER

VIRGINIA DEPARTMENT OF TRANSPORTATION

SPECIFICATION REFERENCE 224 302

T-DI-3,4

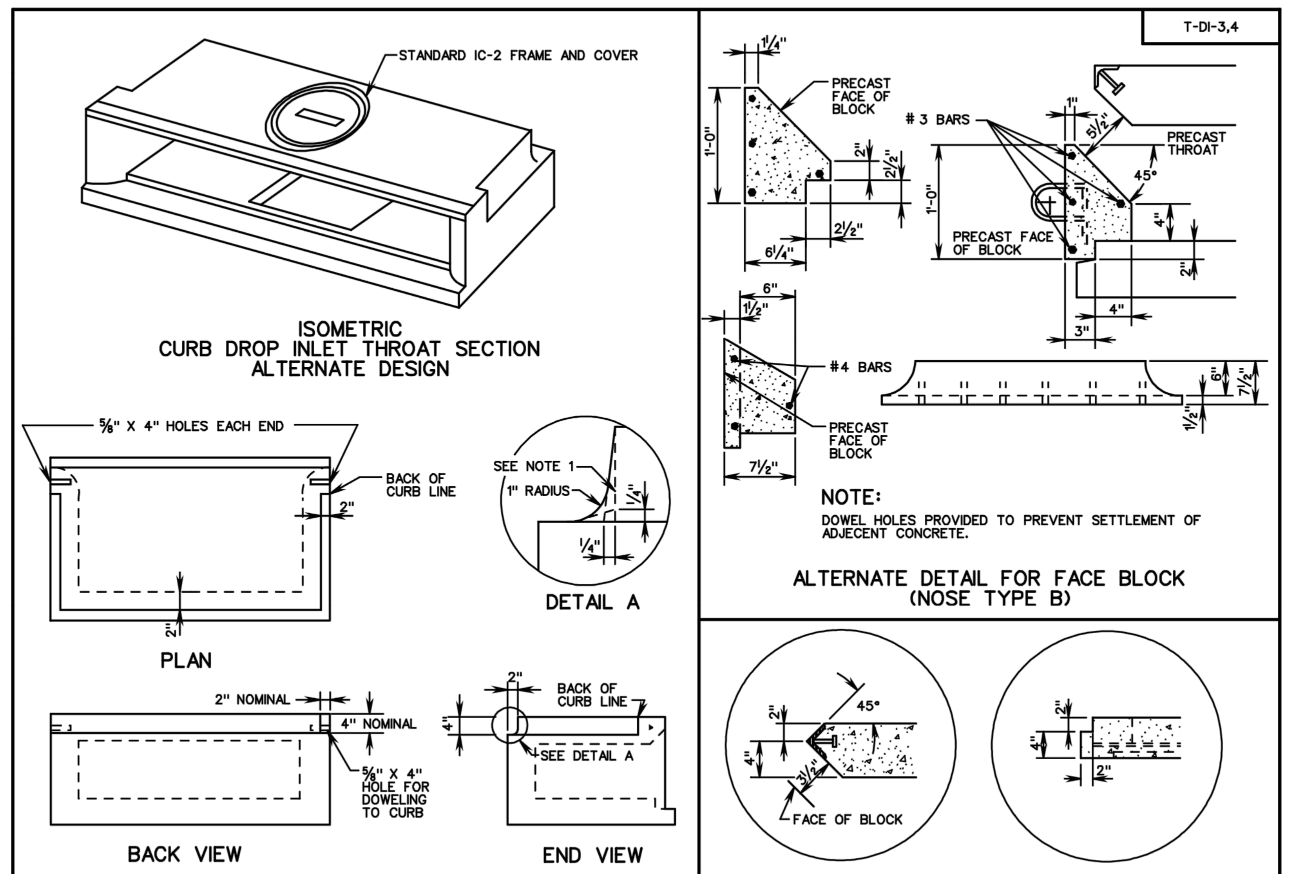

NOTE:
DOWEL HOLES PROVIDED TO PREVENT SETTLEMENT OF ADJECENT CONCRETE.

ALTERNATE DETAIL FOR FACE BLOCK (NOSE TYPE B)

NOTES:
1. 2" x 4" NOTCH MAY BE FORMED WITH STRAIGHT SIDES, TAPERED SIDES OR TAPERED SIDES WITH RADIUS.
2. ALL DETAILS NOT SHOWN TO BE IN ACCORDANCE WITH SHEET 1 OF 2.

SPECIFICATION REFERENCE 105 233 302

STANDARD PRECAST TOP UNITS

VIRGINIA DEPARTMENT OF TRANSPORTATION

VDOT ROAD AND BRIDGE STANDARDS | REVISION DATE | SHEET 2 OF 2 | 103.06

T-DI-3,4

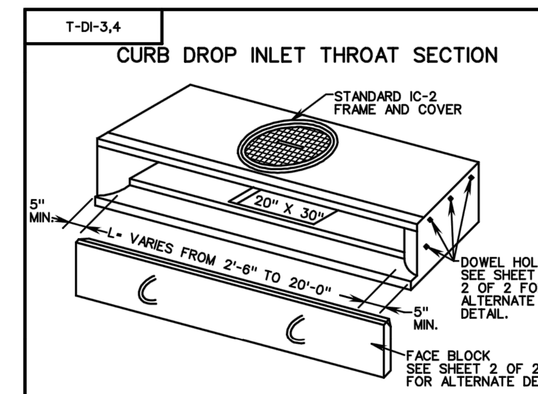

NOTES:
1. SEE GENRERAL NOTES - PRECAST FOR ADDITIONAL DETAILS.
2. CONCRETE TO BE 4000 PSI MINIMUM COMPRESSIVE STRENGTH.
3. REINFORCING STEEL IN ACCORDANCE WITH ASTM A-615 FOR REINFORCING BARS.
4. REINFORCING IN ACCORDANCE WITH ASTM A-185 FOR WELDED WIRE MESH.
5. DIMENSIONS SHOWN ARE MINIMUM. ACTUAL DIMENSIONS MAY VARY WITH MANUFACTURER.
6. THIS UNIT MAY BE USED WITH ALL STANDARD DI-3 & DI-4 CURB DROP INLETS.
7. EACH FACE BLOCK SHALL HAVE 2 OR MORE LOOPS (#3 BARS) CAST IN FACE AS SHOWN. THESE LOOPS MAY BE USED FOR LIFT, AND FOR TIEING IN THE POURED IN PLACE GUTTER SECTION. FACE BLOCKS ARE TO BE SEALED WITH GROUT OR POLYSULFIDE SEALER.
8. STANDARD ST-1 STEPS NOT REQUIRED IN THIS TOP UNIT.

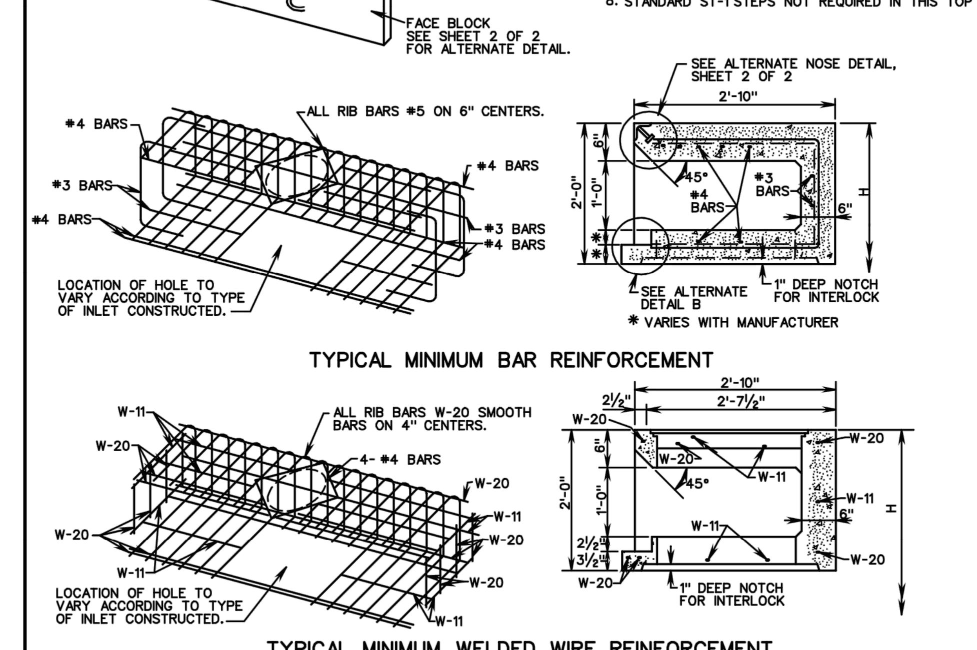

RECOMMENDED MINIMUM HEIGHT CHART	PIPE SIZE	H DIMENSION CONCRETE PIPE
DI-3A,B,C, FOR 36" I.D. BASE UNIT	6"	2'-11"
	8"	3'-1¼"
	10"	3'-3¼"
	12"	3'-6"
	15"	3'-9¼"
	18"	4'-0½"
	21"	4'-3¾"
DI-3A,B,C, D, E, & F FOR 48" I.D. BASE UNIT	6"	3'-9"
	8"	3'-11¼"
	10"	4'-1¼"
	12"	4'-4"
	15"	4'-7¼"
	18"	4'-10½"
	21"	5'-1¾"
	24"	5'-5"
	27"	5'-8¼"
DI-3A,B,C,D,E, & F FOR 60" OR 72" I.D. BASE UNITS & DI-4A, B, C, D, E, & F	12"	4'-4"
	15"	4'-7¼"
	18"	4'-10½"
	21"	5'-1¾"
	24"	5'-5"
	27"	5'-8¼"
	30"	6'-2¾"
	33"	6'-5¾"
	36"	6'-9"
	42"	7'-3½"
	48"	7'-10"

VDOT ROAD AND BRIDGE STANDARDS | SHEET 1 OF 2 | 103.05 | REVISION DATE

STANDARD PRECAST TOP UNITS

VIRGINIA DEPARTMENT OF TRANSPORTATION

SPECIFICATION REFERENCE 105 233 302

IS-1

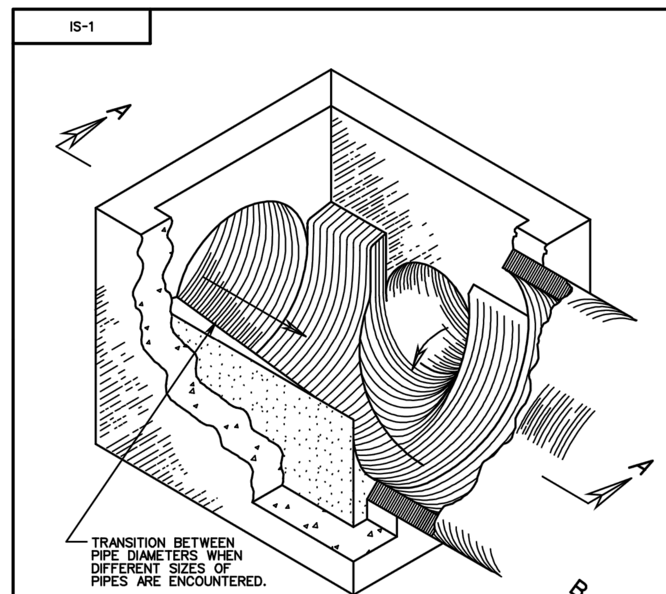

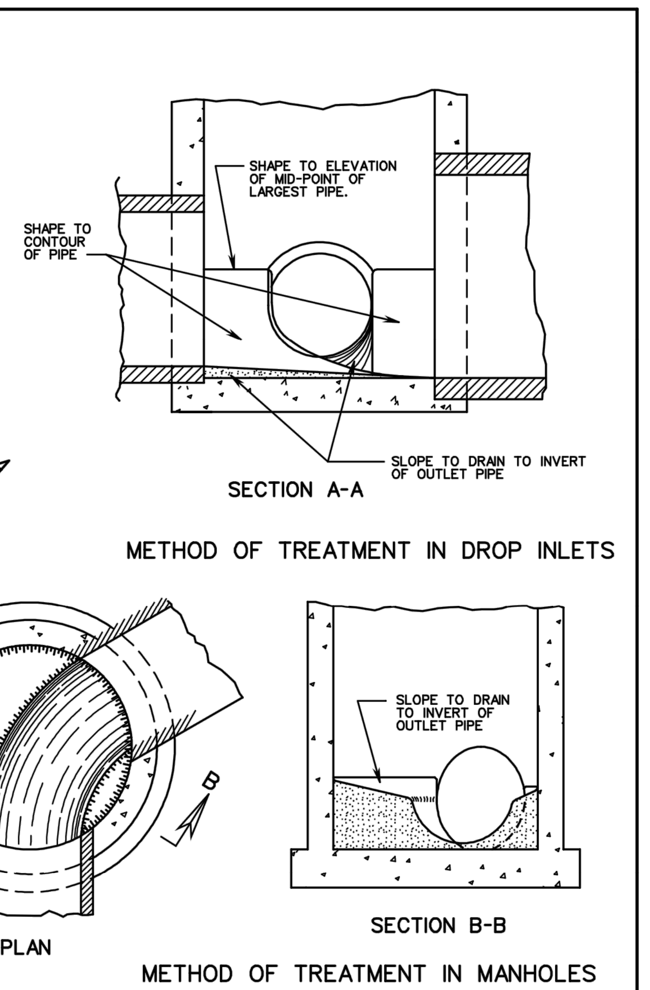

NOTES:
SHAPING OF MANHOLE AND INLET INVERTS IN ACCORDANCE WITH THIS DRAWING IS TO APPLY TO THOSE STRUCTURES SPECIFIED ON PLANS OR WHERE INVERT OF PIPE IS ABOVE INVERT OF STRUCTURE.

MANHOLE OR DROP INLET IS TO BE FORMED AND CONSTRUCTED IN ACCORDANCE WITH APPLICABLE STANDARD OR SPECIAL DRAWING. THE INVERT SHAPING AS DETAILED HEREON IS TO CONSIST OF A PORTLAND CEMENT CONCRETE MIX CONFORMING TO CLASS A3 OR CLASS C1, EXCEPT THAT 25% OF COARSE AGGREGATE MAY BE UP TO 4" IN DIAMETER AND CONSIST OF STONE, BROKEN BRICK, BROKEN CONCRETE OR BROKEN CONCRETE BLOCK. THE SURFACE SHALL BE LEFT SMOOTH BY MEANS OF HAND TROWELLING. NONE OF THE COARSE AGGREGATE SHALL REMAIN EXPOSED.

DETAILS OF INVERT SHAPING AS SHOWN HEREON ARE FOR EXAMPLE PURPOSES ONLY. EACH MANHOLE OR DROP INLET IS TO BE SHAPED INDIVIDUALLY TO BEST FIT THE PARTICULAR INLET AND OUTLET CONFIGURATION AND FLOW LINES.

VDOT ROAD AND BRIDGE STANDARDS | SHEET 1 OF 1 | 106.08 | REVISION DATE

STANDARD METHOD OF SHAPING MANHOLE & INLET INVERTS

VIRGINIA DEPARTMENT OF TRANSPORTATION

SPECIFICATION REFERENCE 302

ES-1

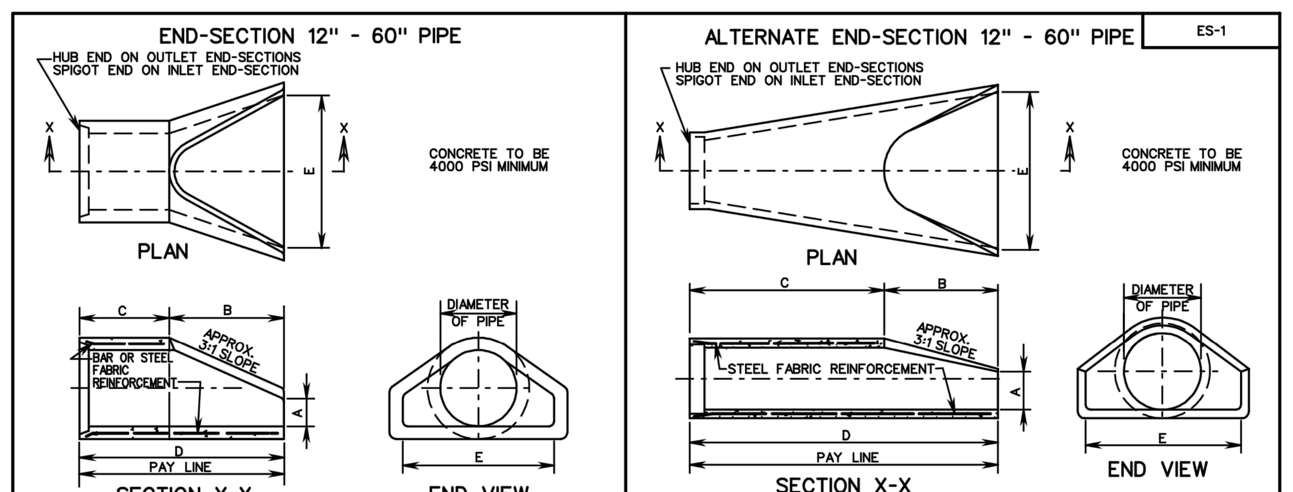

END SECTION DIMENSIONS

PIPE DIAMETER	A	B	C	D	E
12"	4"	2'-0"	2'-0"	4'-0"	2'-0"
15"	6"	2'-3"	1'-9"	4'-0"	2'-6"
18"	9"	2'-3"	1'-9"	4'-0"	3'-0"
21"	9¼"	2'-11"	2'-1"	5'-0"	3'-6"
24"	9½"	3'-7"	2'-6"	6'-1"	4'-0"
27"	10¾"	4'-0"	2'-1"	6'-1"	4'-6"
30"	1'-0"	4'-6"	1'-7¾"	6'-1¾"	5'-0"
33"	1'-1½"	4'-10½"	2'-3¼"	7'-1¾"	5'-6"
36"	1'-3"	5'-3"	2'-10¾"	8'-1¾"	6'-0"
42"	1'-9"	5'-3"	2'-11"	8'-2"	6'-6"
48"	2'-0"	6'-0"	2'-2"	8'-2"	7'-0"
54"	2'-3"	5'-5"	2'-9¼"	8'-2¼"	7'-6"
60"	2'-11"	5'-0"	3'-3"	8'-3"	8'-0"

END SECTION DIMENSIONS

PIPE DIAMETER	A	B	C	D	E
12"	4"	2'-0"	4'-1"	6'-1"	2'-0"
15"	6"	2'-3"	3'-10"	6'-1"	2'-6"
18"	9"	2'-3"	3'-10"	6'-1"	3'-0"
21"	9"	2'-11"	3'-2"	6'-1"	3'-6"
24"	10"	3'-7"	2'-8"	6'-3"	4'-0"
27"	10½"	4'-0"	2'-1½"	6'-1½"	4'-6"
30"	1'-0"	4'-6"	1'-7¾"	6'-1¾"	5'-0"
33"	1'-1½"	4'-10½"	3'-3¼"	8'-1¾"	5'-6"
36"	1'-3"	5'-3"	2'-10¾"	8'-1¾"	6'-0"
42"	1'-9"	5'-3"	2'-11"	8'-2"	6'-6"
48"	2'-0"	6'-0"	2'-2"	8'-2"	7'-0"
54"	2'-3"	5'-5"	2'-11"	8'-4"	7'-6"
60"	2'-6"	5'-0"	3'-3"	8'-3"	8'-0"

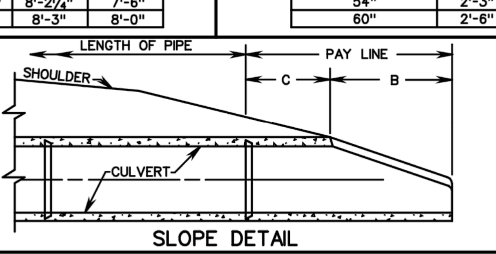

SLOPE DETAIL

NOTES:
PIPE LENGTHS SHOWN ON PLANS ARE BASED ON END-SECTION DESIGN SHOWN ON THE LEFT. IF THE CONTRACTOR ELECTS TO USE THE ALTERNATE DESIGN SHOWN ON THE RIGHT, LENGTHS WILL BE REDUCED BY THE DIFFERENCE IN DIMENSION "D".

SPECIFICATION REFERENCE 302

FLARED END SECTION
12" - 60" CONCRETE PIPE CULVERTS

VIRGINIA DEPARTMENT OF TRANSPORTATION

VDOT ROAD AND BRIDGE STANDARDS | REVISION DATE | SHEET 1 OF 1 | 102.01

EW-1,1A

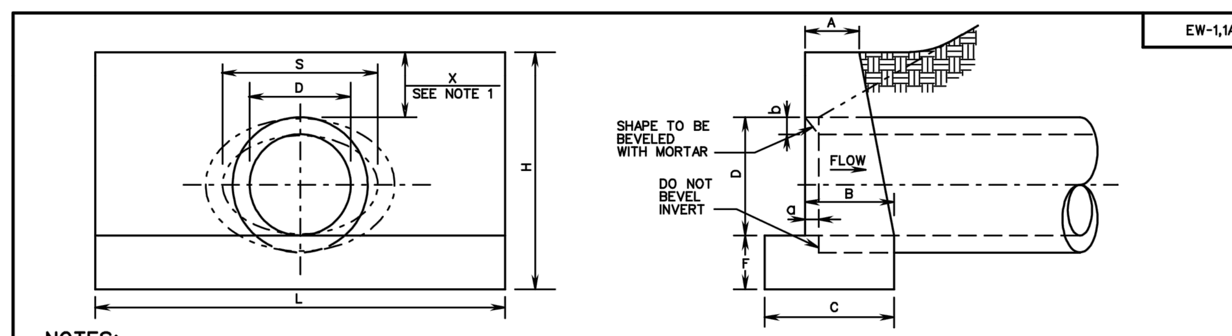

NOTES:
1. "H" MAY BE REDUCED UNTIL "X" REACHES A MINIMUM OF 4" WHERE ENDWALL WOULD PROTRUDE ABOVE SHOULDER LINE. IN NO CASE SHALL TOP OF ENDWALL PROJECT ABOVE FILL SLOPE, DITCH SLOPE, OR SHOULDER.
2. THIS ITEM MAY BE PRECAST OR CAST IN PLACE.
3. ALL CAST IN PLACE CONCRETE TO BE CLASS A3. FOR PRECAST SEE SHEET 101.02.
4. THIS STANDARD TO BE USED WITH STRAIGHT CROSSINGS AND ALL SKEWS(0° TO 45°).
5. HEADWALL TO BE BEVELED IN ALL AREAS EXCEPT WHERE A CONFLICT WITH INVERT OR WINGWALLS OCCUR
6. BEVEL EDGE IS REQUIRED ON THE HEADWALL AT THE INLET END OF THE CULVERT (WHERE THE FLOW ENTERS THE CULVERT).
7. HEADWALL AT THE OUTLET END OF THE CULVERT MAY BE EITHER SQUARE EDGE OR BEVEL EDGE.
8. ON SHALLOW FILLS, WHERE ENDWALLS ARE 1' OR LESS BELOW SHOULDER LINE, THE TOP OF THE ENDWALL SHALL BE CONSTRUCTED PARALLEL TO THE GRADE OF THE ROAD.
9. ¾" CHAMFER MAY BE PROVIDED ON ALL EDGES AT MANUFACTURER'S OPTION.

EW-1

ENDWALL FOR CIRCULAR PIPE

	DIAMETER OF PIPE CULVERT					
	12"	15"	18"	21" OR 24"	27" OR 30"	33" OR 36"
A	0'-6"	0'-8"	0'-9"	0'-11"	1'-0"	1'-0"
B	0'-11"	1'-1"	1'-3"	1'-6"	1'-9"	2'-0"
C	1'-4"	1'-7"	1'-9"	2'-2"	2'-6"	2'-9"
D	1'-0"	1'-3"	1'-6"	2'-0"	2'-6"	3'-0"
F	0'-6"	0'-8"	0'-8"	0'-9"	0'-9"	0'-9"
H	2'-3"	2'-11"	3'-2"	3'-9"	4'-3"	4'-9"
L	4'-0"	5'-0"	6'-0"	8'-0"	10'-0"	12'-0"
a	0'-1¼"	0'-1¾"	0'-2"	0'-2½"	0'-3¼"	0'-3¾"
b	0'-1"	0'-1¼"	0'-1½"	0'-2"	0'-2½"	0'-3"
CUBIC YARDS OF CONCRETE						
CONC. PIPE	0.241	0.492	0.697	1.319	2.067	2.947
C.M. PIPE	0.257	0.521	0.739	1.398	2.198	3.145

EW-1A

ENDWALL FOR ELLIPTICAL PIPE

	SIZE OF ELLIPTICAL PIPE CULVERT (SPAN x RISE)							
	23"x14"	30"x19"	34"x22"	38"x24"	42"x27"	45"x29"	49"x32"	53"x34"
A	0'-8"	0'-9"	0'-10"	0'-11"	0'-11"	1'-0"	1'-0"	1'-0"
B	1'-2"	1'-5"	1'-6"	1'-8"	1'-9"	1'-10"	1'-11"	1'-11"
C	1'-8"	1'-11"	2'-1"	2'-4"	2'-5"	2'-7"	2'-8"	2'-9"
D	1'-2"	1'-7"	1'-10"	2'-0"	2'-3"	2'-5"	2'-8"	2'-10"
F	0'-8"	0'-8"	0'-9"	0'-9"	0'-9"	0'-9"	0'-9"	0'-9"
H	2'-10"	3'-3"	3'-7"	3'-9"	4'-0"	4'-2"	4'-5"	4'-7"
L	5'-5"	7'-2"	8'-6"	9'-2"	10'-2"	10'-11"	12'-1"	12'-11"
S	1'-11"	2'-6"	2'-10"	3'-2"	3'-6"	3'-9"	4'-1"	4'-5"
a	0'-2½"	0'-3¼"	0'-3½"	0'-4"	0'-4½"	0'-4¾"	0'-5"	0'-5½"
b	0'-2"	0'-2½"	0'-2¾"	0'-3"	0'-3½"	0'-3¾"	0'-4"	0'-4½"
CUBIC YARDS OF CONCRETE								
CONC.PIPE	0.502	0.855	1.236	1.500	1.811	2.101	2.512	2.801

SPECIFICATION REFERENCE 105 302

STANDARD ENDWALL FOR PIPE CULVERTS
12" - 36" CIRCULAR AND 23" x 14" - 53" x 34" ELLIPTICAL PIPES

VIRGINIA DEPARTMENT OF TRANSPORTATION

VDOT ROAD AND BRIDGE STANDARDS | REVISION DATE | SHEET 1 OF 1 | 101.01

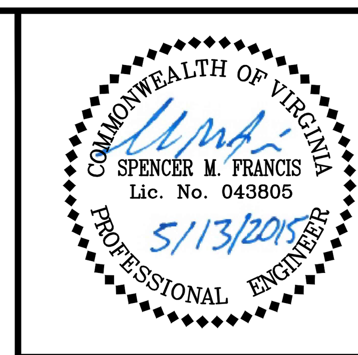

Bowman CONSULTING

Bowman Consulting Group, Ltd.
www.bowmanconsulting.com
Bowman Consulting Group, Ltd.
3951 Westerre Parkway
Suite 150
Richmond, Virginia 23233
Phone: (804) 616-3240
Fax: (804) 270-2008

SUBMITTAL DATE
05/13/2015

DATE	REVISION
05/01/2015	PROGRESS SET
05/06/2015	BID SET
05/13/2015	FINAL BID SET

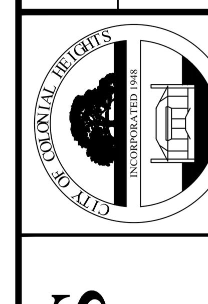

DRAWN DF, JD, JF, JW, MT
DESIGNED DF, JW, MT
CHECKED SF, JJ
SCALE NONE

CITY OF COLONIAL HEIGHTS
DEPARTMENT OF PUBLIC WORKS
ENGINEERING & DEVELOPMENT DIVISION

BRUCE AVENUE DRAINAGE IMPROVEMENTS
STANDARD DRAINAGE DETAILS

SHEET NO.
9 OF 31